Fellowes®

8033201
Copyholder with Memo Board

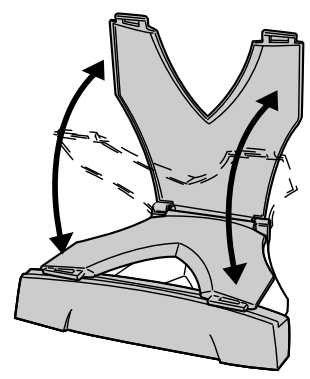

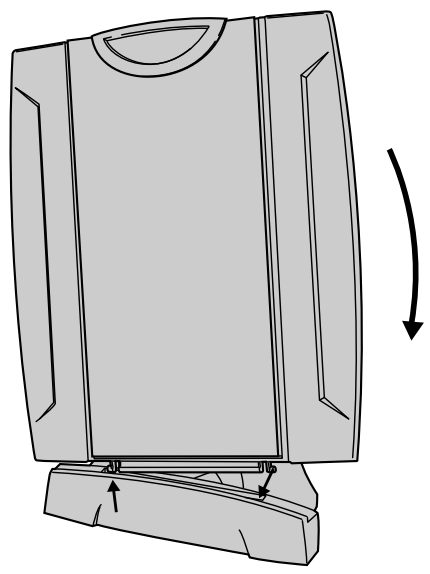

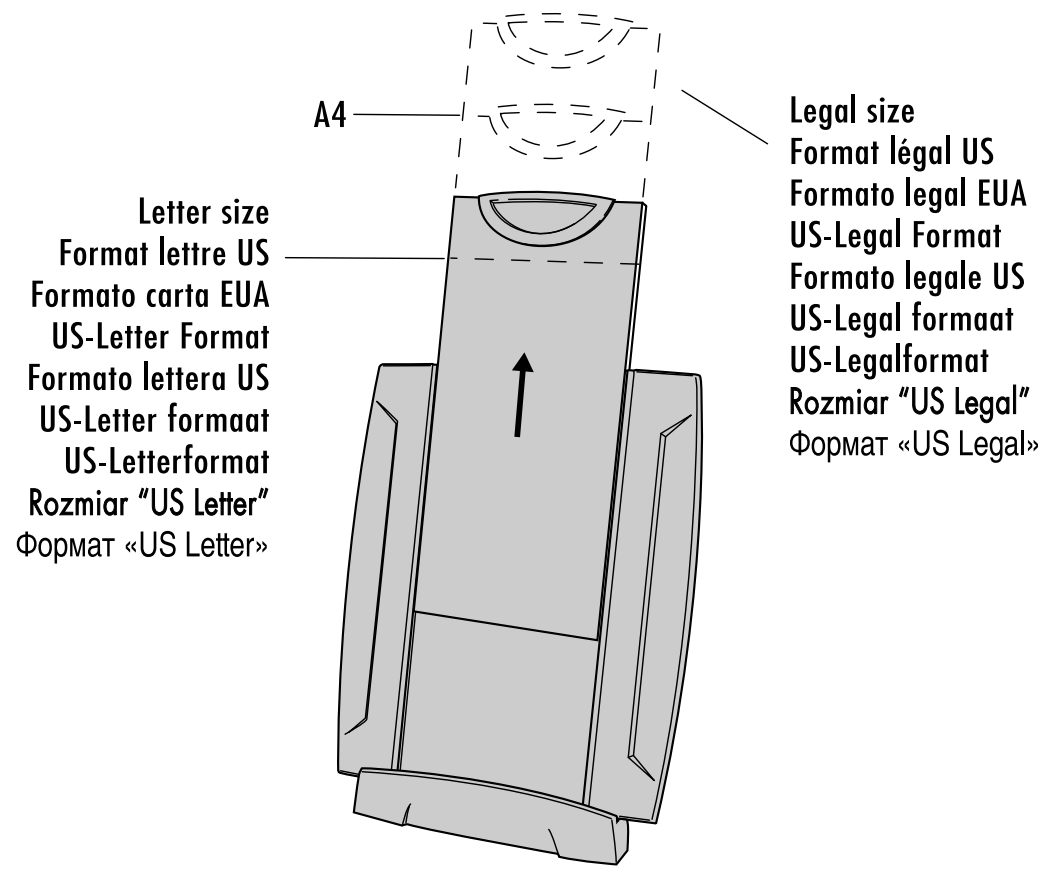

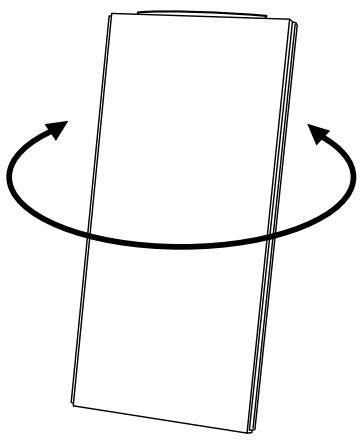

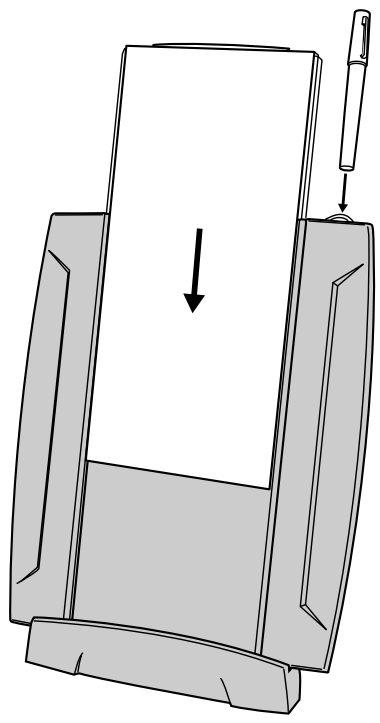

Not Included
Pas fourni
No incluido
Nicht im Lieferumfang
Non incluso
Niet inbegrepen
Medföljer inte
Nie wchodzi
w skład zestawu
Не включен

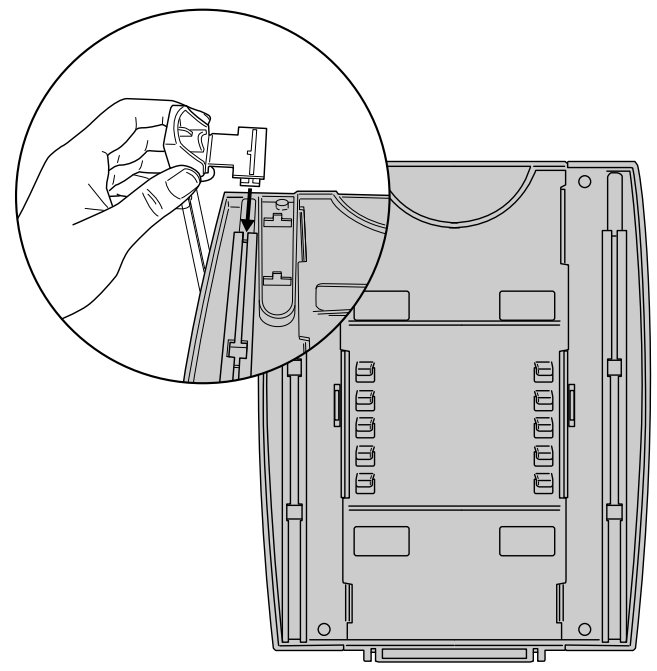

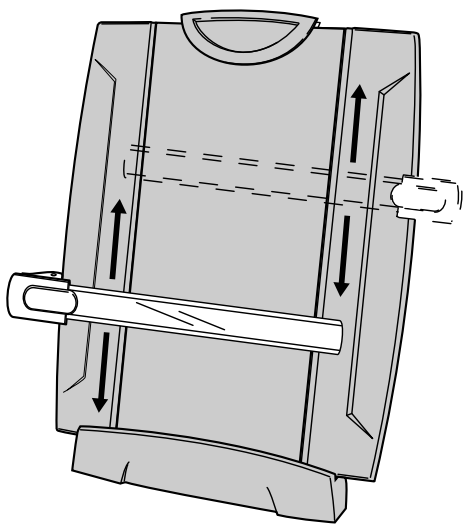

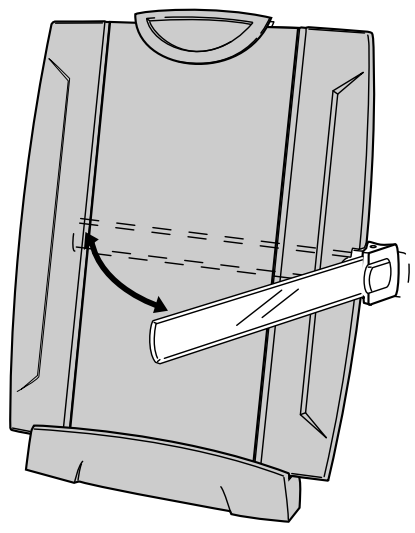

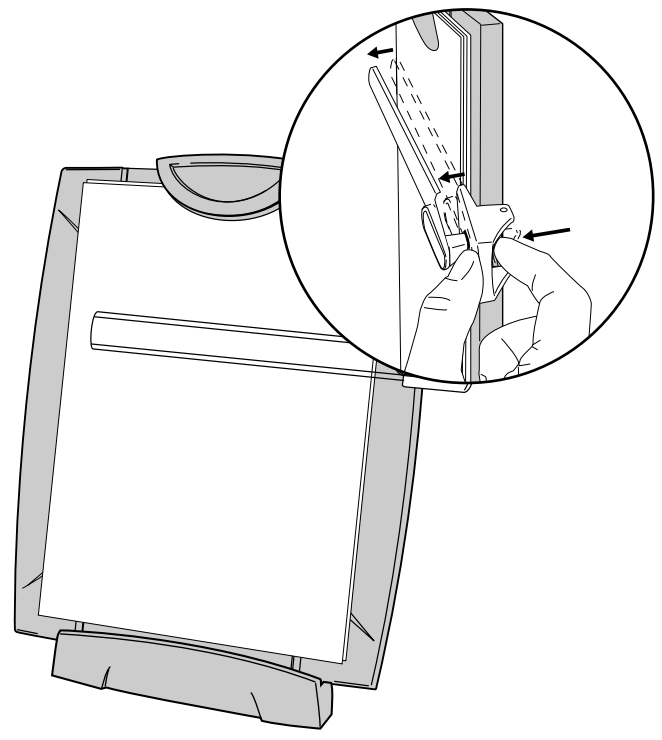

Fellowes® 1789 Norwood Avenue Itasca, Illinois 60143-1095 630-893-1600 http://www.fellowes.com

Australia Benelux Canada France Germany Italy Japan Korea Poland Singapore United Kingdom

©2004 Fellowes, Inc. Part No. 861999

C & A Marketing Corp. 630-279-3100
Job Number:FEL-2004-C68
Client: Fellowes
Project: 8033201 Monitor Mount
Date: 09/02/04
Product: 80332 Monitor Mount
File Name: CopyHolder8033201_090204.ai