Tallo Modular™ 2FS (8613701 / 8615301 / 8616301)

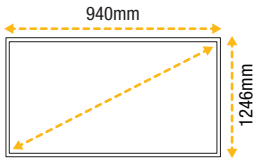

32” (81.28cm)

1 - 9kg

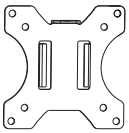

VESA:
75 x 75 / 100 x 100

15 Years
Limited Warranty

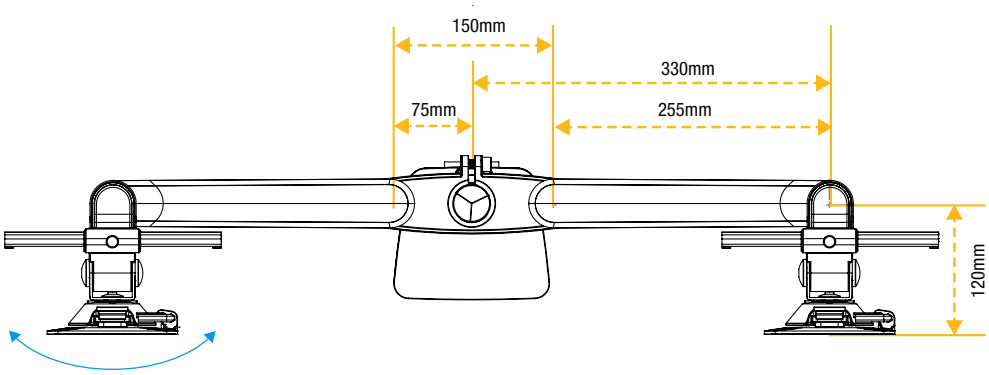

Monitor Pan:
+/- 90°

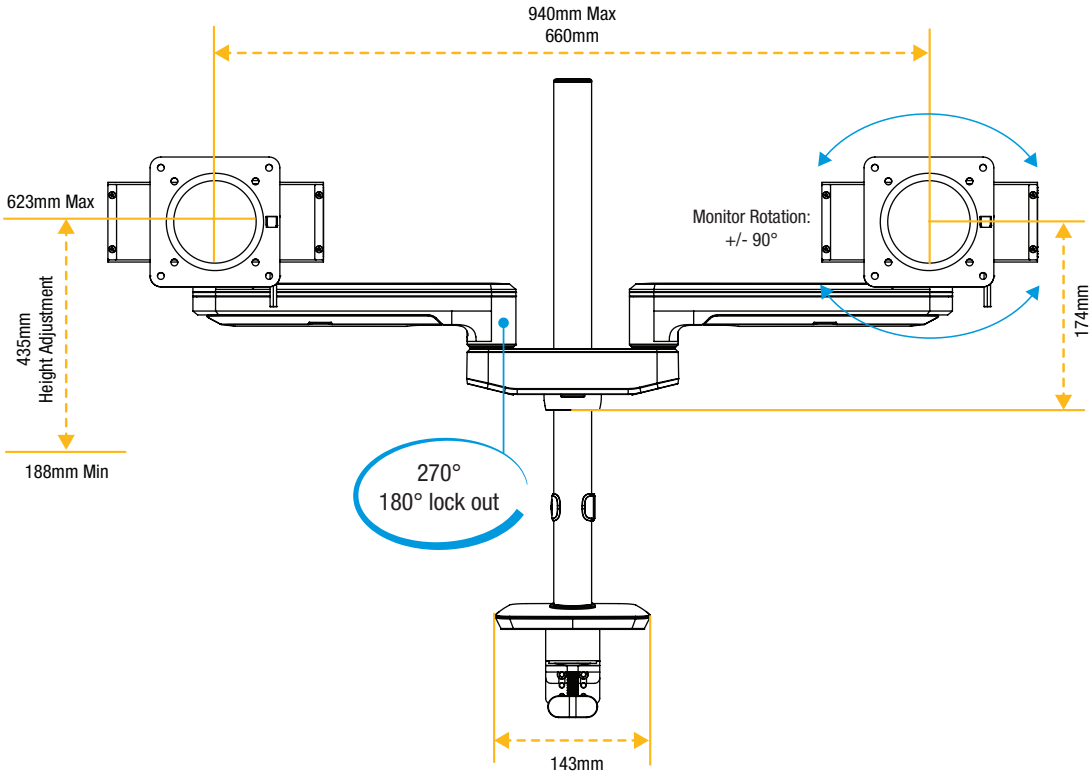

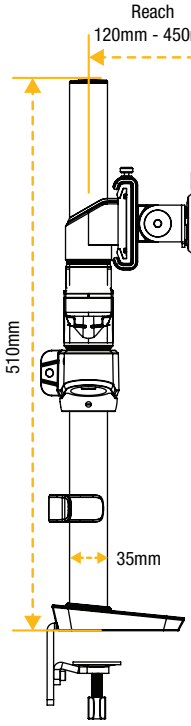

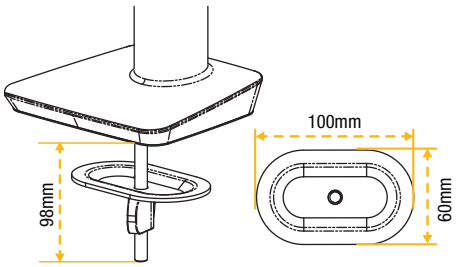

Grommet

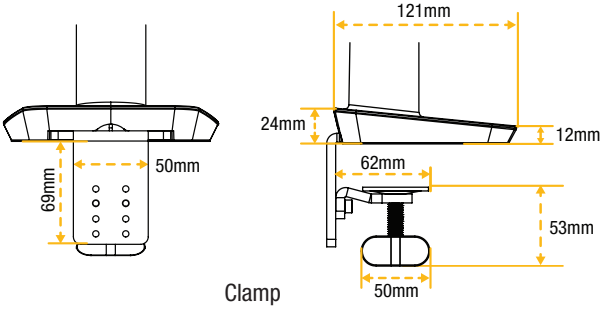

Clamp